All stainless steel pressur gauges with Bourdon tube with or without glycerine filling

Nominal size ND 63
Accuracy class 1.6

according to DIN EN 837-1

Features
Ideal for hard conditions
High reliability on a longterm basis
Stainless steel case and measuring system
Overange protection 1,3 times max.
Protection IP 54 resp.IP 65 (filled)

Applications
Chemical and petrochemical industry
Foodstoffs and beverages industry
Paper industry

			with glycerine filling	
Models and ND	**MR-30 63**	**MR-35 63**	**MR-30 63 F**	**MR-35 63 F**
Connections	bottom	back,eccentric	bottom	back,eccentric
Ranges in bar	0...1, 1,6, 2,5, 4, 6, 10, 16, 25, 40, 60, 100, 160, 250, 400, 600, 1.000 -1 / 0, -1 / +0,6, -1 / +1,5, -1 / +3, -1 / +5, -1 / +9, -1 / +15			
Application	Constant load : up to full scale value Alternating load : up to 0,9 x full scale value Overange protection 1,3 times max.			
Case	CrNi steel			
Bezel	CrNi steel			
Window	Lamineted safety glass			
Dial	Aluminium , white ,scale and imprint black			
Pointer	Aluminium, black			
Movement	CrNi steel			
Measuring element	CrNi steel ,Bourdon tube <40 bar, helical tube > 60 bar,			
Connection	CrNi steel			
Connectionthread	G 1/4 B			
Protection	IP 65 to EN 60529 / IEC 529			
Temperature drift	Medium: -20°C bis 80°C, Ambient : -25°C bis 60°C			
Weight	0,2 kg		0,25 kg	

SUCHY MESSTECHNIK
Garnsdorfer Hauptstraße 116 ,D-09244 Lichtenau ,Tel.:037208/66580 ,Fax:037208/66582
e-Mail:suchy@suchy-messtechnik.de

Dimensions

Connection bottom

Connection back,eccentric

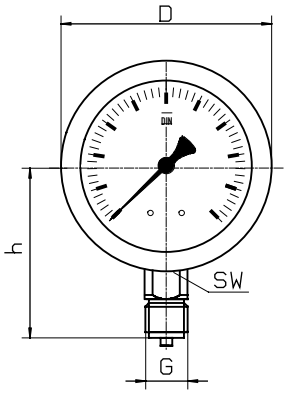

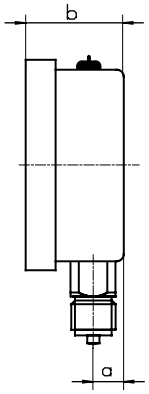

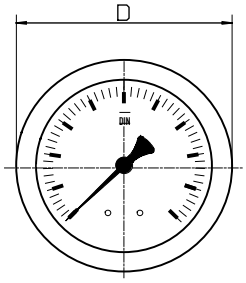

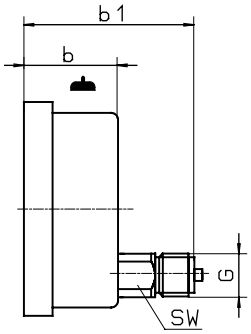

front flange

rear flange

front flange

with triangle
bezel a.U-clamp

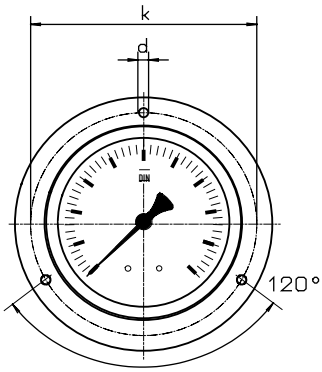

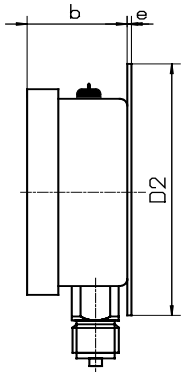

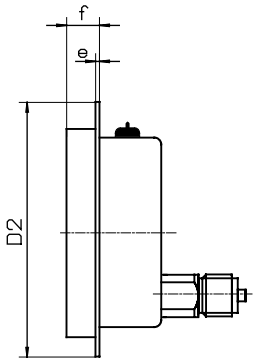

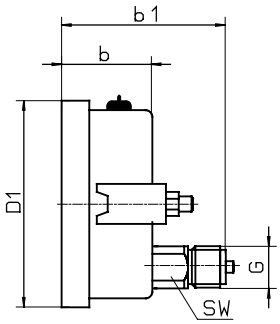

Dimensions in mm														
Model	NG	D	a	b	b1	h		D2	e	f	k	d	sw	G
MR-30	63	68,5	9,5	31	-	53		85	3	16	75	3,7	14	G 1/4 B
MR-35	63	68,5	-	31	60	-		85	3	16	75	3,7	14	G 1/4 B
MR-30 F	63	68,5	9,5	31	-	53		85	3	16	75	3,7	14	G 1/4 B
MR-35 F	63	68,5	-	31	60	-		85	3	16	75	3,7	14	G 1/4 B

Modelspecification

Model	Connection	Filling	Nominal size	Range	Options
MR-3	0 or 5	F or -	63	f.e. 10 bar	

Bottom = 0
Back = 5

Case ND 63 = 63

after rangespecification
for 10 bar = 010

with filling = F

for example : front mounting flange

SUCHY MESSTECHNIK
Garnsdorfer Hauptstraße 116 ,D-09244 Lichtenau ,Tel.:037208/66580 ,Fax:037208/66582
e-Mail:suchy@suchy-messtechnik.de

Modifications reserved

All stainless steel pressure gauges with Bourdon tube

Nominal size ND 100 ,ND 160
Accuracy class 1.0

according to DIN EN 837-1

Features
Ideal for hard conditions
High reliability on a longterm basis
Stainless steel case and measuring system
Overange protection 1,3 times max.
Protection IP 54 resp.IP 65 (filled)

Applications
Chemical and petrochemical industry
Foodstoffs and beverages industry
Paper industry

Models and ND	MR-30 100	MR-35 100	MR-30 160	MR-35 160
Connections	bottom	back,eccentric	bottom	back,eccentric
Ranges in bar	0...0,6, 1, 1,6, 2,5, 4, 6, 10, 16, 25, 40, 60, 100, 160, 250, 400, 600, 1.000, 1.600 -0,6 / 0, -1 / 0, -1 / +0,6, -1 / +1,5, -1 / +3, -1 / +5, -1 / +9, -1 / +15, -1 / +24			
Application	Constant load : up to full scale value , >1000 bar 3/4 Alternating load : up to 0,9 x full scale value , > 1000 bar 2/3 Overange protection 1,3 times max. , > 1000 bar full scale value			
Case	CrNi steel , pressure relief opening (closed with rubber disk)			
Bezel	CrNi steel			
Window	Lamineted safety glass			
Dial	Aluminium , white ,scale and imprint black			
Pointer	Aluminium, black			
Movement	CrNi steel			
Measuring element	CrNi steel ,Bourdon tube <40 bar, helical tube > 60 bar,			
Connection	CrNi			
Connectionthread	G 1/2 B			
Protection	IP 54 to EN 60529 / IEC 529			
Temperature drift	Medium: -20°C bis 80°C, Ambient : -25°C bis 60°C			
Weight	0,6 kg		1,0 kg	

SUCHY MESSTECHNIk
Garnsdorfer Hauptstraße 116 ,D-09244 Lichtenau ,Tel.:037208/66580 ,Fax:037208/66582
e-Mail:suchy@suchy-messtechnik.de

Dimensions

Connection bottom

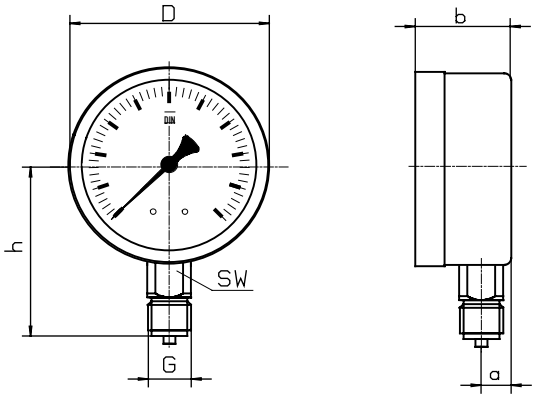

Connection back,eccentric

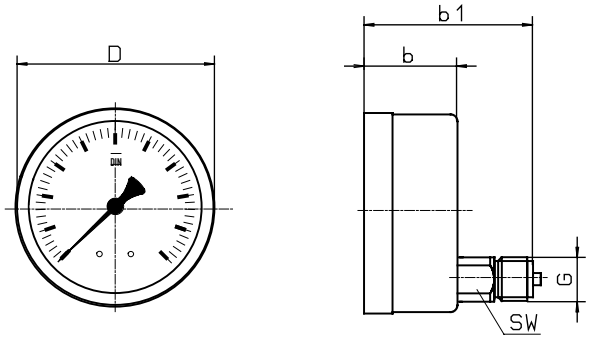

front flange

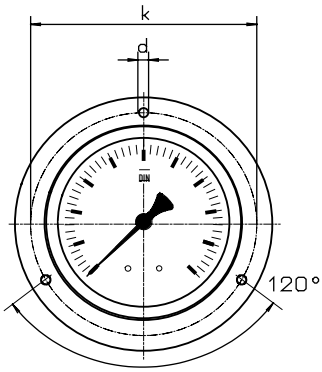

rear flange

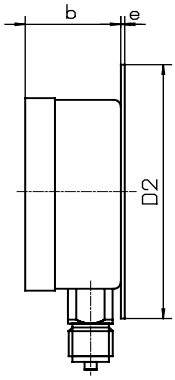

front flange

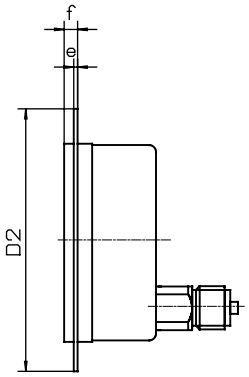

with triangle bezel a. U-clamp

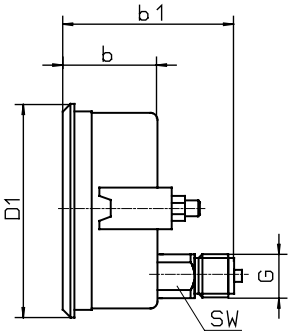

Dimensions in mm														
Model	NG	D	a	b	b1	h	D1	D2	e	f	k	d	sw	G
MR-30	100	101	15	49	-	86	107	132	2	6	116	5	22	G 1/2 B
MR-35	100	101	-	49	85	-	107	132	2	6	116	5	22	G 1/2 B
MR-30	160	160	15	51	-	118	-	196	3	8	178	5,6	22	G 1/2 B
MR-35	160	160	-	51	86	-	166	196	3	8	178	5,6	22	G 1/2 B

Modelspecification

Model	Connection	Nominal size	Range	Options
MR-3	0 or 5	100 or 160	f.e. 10 bar	

Bottom = 0
Back = 5

Case ND 100 = 100
Case ND 160 = 160

after rangespecification
for 10 bar = 010

for example : front mounting flange

SUCHY MESSTECHNIK
Garnsdorfer Hauptstraße 116 ,D-09244 Lichtenau ,Tel.:037208/66580 ,Fax:037208/66582
e-Mail:suchy@suchy-messtechnik.de

Modifications reserved

All stainless steel pressure gauges with Bourdon tube with glycerin filling

Nominal size ND 100,ND 160
Accuracy class 1.0

according to DIN EN 837-1

Features
Ideal for hard conditions
High reliability on a longterm basis
Stainless steel case and measuring system
Overange protection 1,3 times max.
Protection IP 65

Applications
Chemical and petrochemical industry
Foodstoffs and beverange industry
Paper industry

Models and ND	MR-30 F 100	MR-35 F 100	MR-30 F 160	MR-35 F 160
Connections	bottom	back,eccentric	bottom	back,eccentric
Ranges in bar	0...0,6, 1, 1,6, 2,5, 4, 6, 10, 16, 25, 40, 60, 100, 160, 250, 400, 600, 1.000, 1.600 -0,6 / 0, -1 / 0, -1 / +0,6, -1 / +1,5, -1 / +3, -1 / +5, -1 / +9, -1 / +15, -1 / +24			
Application	Constant load : up to full scale value,>1000 bar 3/4 Alternating load : up to 0,9 x full scale value ,> 1000 bar 2/3 Overange protection 1,3 times max.,> 1000 bar full scale value			
Case	CrNi steel , pressur relief opening (closed with rubber disk)			
Bezel	CrNi steel			
Window	Lamineted safety glass			
Dial	Aluminium white, scale and imprint blackSkalierung schwarz			
Pointer	Aluminium, black			
Movement	CrNi steel			
Measuring element	CrNi steel Bourdon tube < 40 bar, helial tube > 60 bar			
Connection	CrNi steel			
Connectionthread	G 1/2 B			
Protection	IP 65 to EN 60529 / IEC 529			
Temperature drift	Medium: -20°C to 80°C, ambient: -25°C to 60°C			
Weight	0,9 kg		2,1 kg	

SUCHY MESSTECHNIK
Garnsdorfer Hauptstraße 116 ,D-09244 Lichtenau ,Tel.:037208/66580 ,Fax:037208/66582
e-Mail:suchy@suchy-messtechnik.de

Dimensions

Connection bottom

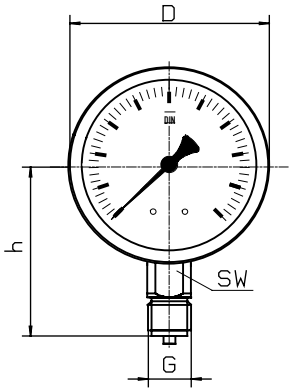

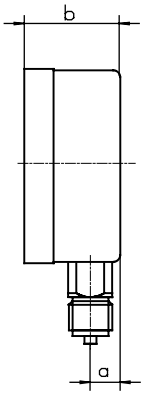

Connection back,eccentric

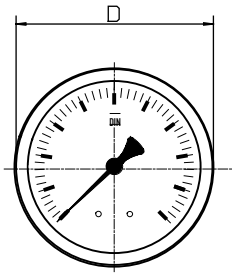

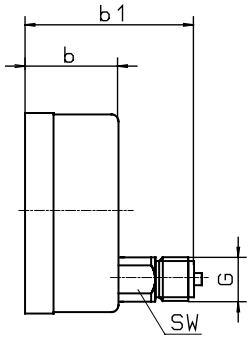

front flange

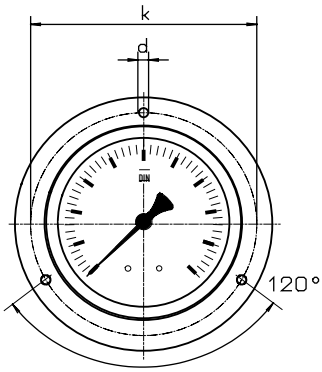

rear flange

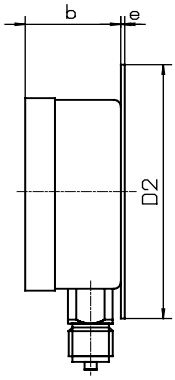

front flange

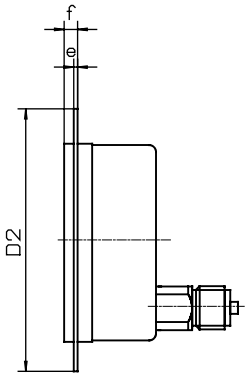

with triangle bezel a. U-clamp

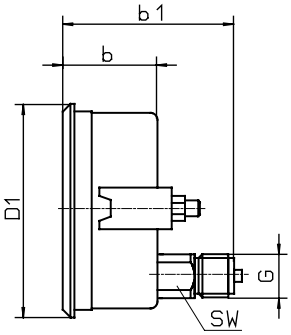

Dimensions in mm														
Model	NG	D	a	b	b1	h	D1	D2	e	f	k	d	sw	G
MR-30 F	100	101	15	49	-	86	107	132	2	6	116	5	22	G 1/2 B
MR-35 F	100	101	-	49	85	-	107	132	2	6	116	5	22	G 1/2 B
MR-30 F	160	160	15	51	-	118	-	196	3	8	178	5,6	22	G 1/2 B
MR-35 F	160	160	-	51	86	-	166	196	3	8	178	5,6	22	G 1/2 B

Modelspecification

Model	**Connection**	**F**	**Nominal size**	**Range**	**Options**
MR-3	0 or 5	F	100 or 160	f.e. 10 bar	

Bottom = 0
Back = 5

filling

Case ND 100 = 100
Case ND 160 = 160

after rangespecification
for 10 bar = 010

for example : front mounting flange

SUCHY MESSTECHNIK
Garnsdorfer Hauptstraße 116 ,D-09244 Lichtenau ,Tel.:037208/66580 ,Fax:037208/66582
e-Mail:suchy@suchy-messtechnik.de

Modifications reserved

All stainless steel pressure gauges for special safety to DIN EN 837-1 with or without glycerine filling

Nominal size ND 100 and 160
Accuracy class 1.0

according to DIN EN 837-1 (DIN 16006)

Features
Solid front betwen measuring system and dial
Fullfills highest safety requirements to DIN 16006
Vibration free display and long service life
through glycerine filling
Ideal for hard conditions
High reliability on a longterm basis

Application
Chemical and petrochemical industry
Foodstoffs and beverages industry
Paper industry
Processing technology,
Machine and apparatus construction,

			with glycerine filling	
Models and ND	**MR-36 100**	**MR-36 160**	**MR-36 100 F**	MR-36 160 F
Connection	bottom			
Ranges in bar	0...0,6, 1, 1,6, 2,5, 4, 6, 10, 16, 25, 40, 60, 100, 160, 250, 400, 600, 1.000, 1.600 -0,6 / 0, -1 / 0, -1 / +0,6, -1 / +1,5, -1 / +3, -1 / +5, -1 / +9, -1 / +15, -1 / +24			
Application	Constant load : up to end of scale value Alternating load : up to 0,9 x end of scale value Short time : overload capacity 1,3 x			
Case	CrNi steel with blow - out back , solid front			
Bezel	CrNi steel bayonet ring			
Window	Lamineted safety glass			
Dial	Aluminium white, scale and imprint black			
Pointer	Aluminium ,black			
Movement	CrNi steel			
Maesuring element	CrNi steel Bourdon tube < 40 bar, helial tube > 60 bar			
Pressure Connection	SW 22, CrNi steel			
Connectionthread	G 1/2 B			
Protection	IP 65 to EN 60529 / IEC 529			
Temperatures	Medium: -20°C to 80°C, ambient: -25°C to 60°C			
Weight	0,6 kg	1,0 kg	1,6 kg	3,0 kg

SUCHY MESSTECHNIK
Garnsdorfer Hauptstraße 116 ,D-09244 Lichtenau ,Tel.:037208/66580 ,Fax:037208/66582
e-Mail:suchy@suchy-messtechnik.de

Dimensions

Connection bottom

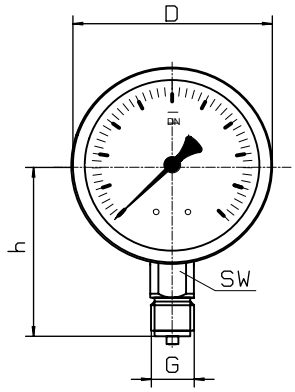

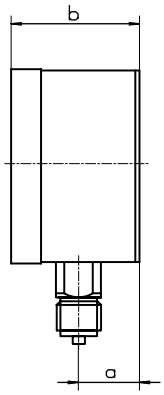

Front flange

Front flange

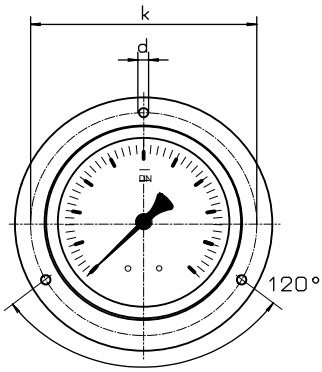

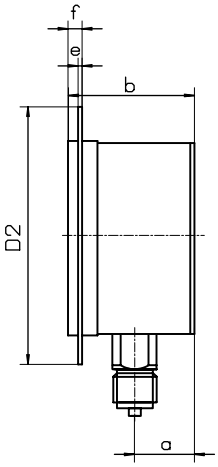

Dimensions in mm														
Model	NG	D	a	b		h		D2	e	f	k	d	sw	G
MR-36	100	101	27	60		86		132	2	6	116	5	22	G 1/2 B
MR-36	160	160	34	69		118		195	3	8	178	5,6	22	G 1/2 B

Modelspecification

Model	Connection	wit or without filling	Nominal size	Ranges	Options
MR-3	6	F or -	100 or 160	f.e. 10 bar	

Safety case
connection bottom

Case ND 100 = 100
Case ND 160 = 160

after Rangespecification
or direkt 10 bar

wit filling = F
without filling -

for example :
front mounting

SUCHY MESSTECHNIK
Garnsdorfer Hauptstraße 116 ,D-09244 Lichtenau ,Tel.:037208/66580 ,Fax:037208/66582
e-Mail:suchy@suchy-messtechnik.de

Modifications reserved

Standard system contact pressure gauges for the chemical industry

with or without dampening

Nominal size ND 100

Accuracy class 1,0
According to DIN EN 837-1

Features
Modular construction system ensures
high reliability and long service life
Measuring system stainless steel 1.4571
Protection to IP 65
Liquid dampening provides vibration-free display

Applications
Process engineering
Mechanical engineering and plant construction
Water treatment
Food industry

Design			**with siliconoil filling**	
Models and ND	**KMR-30 100**	**KMR-35 100**	**KMR-30 100 F**	**KMR-35 100 F**
Connection	bottom	back,eccentric	bottom	back,eccentric
Ranges in bar	0...1, 1,6, 2,5, 4, 6, 10, 16, 25, 40, 60, 100, 160, 250, 400, 600, 1.000, 1.600 -1 / 0, -1 / +0,6, -1 / +1,5, -1 / +3, -1 / +5, -1 / +9, -1 / +15			
Application	Constant load : up to full scale value Alternating load: up to 0,9 x full scale value Short-time: overload capacity 1,3 x full scale value			
Case	CrNi steel			
Bezel	CrNi steel			
Window	Polycarbonat			
Dial	Aluminium white,scale and imprint black to DIN 16109			
Pointer	Aluminium, black			
Movement	CrNi steel			
Measuring element	CrNi steel ,to 40 bar with bourdon tube, from 60 bar helical tube			
Pressure Connection	SW 22, CrNi steel			
Connectin threaad	G 1/2 B			
Protection	IP 54 to EN 60529 / IEC 529		IP 65 to EN 60529 / IEC 529	
Temperatures	Medium: -20°C bis 80°C, Ambient: -25°C bis 60°C			
Weight	0,9 kg		1,4 kg	
Technical Information for Contact types look at modelspecification M 950 and M 960				

SUCHY MESSTECHNIK
Garnsdorfer Hauptstraße 116 ,D-09244 Lichtenau ,Tel.:037208/66580 ,Fax:037208/66582
e-Mail:suchy@suchy-messtechnik.de

Dimensions

Connection position bottom radial

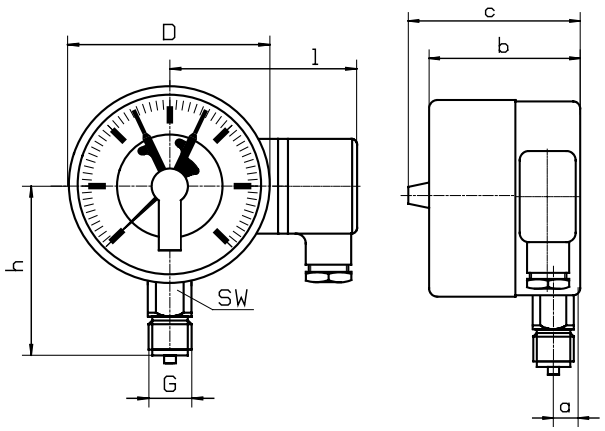

Connection position back,eccentric

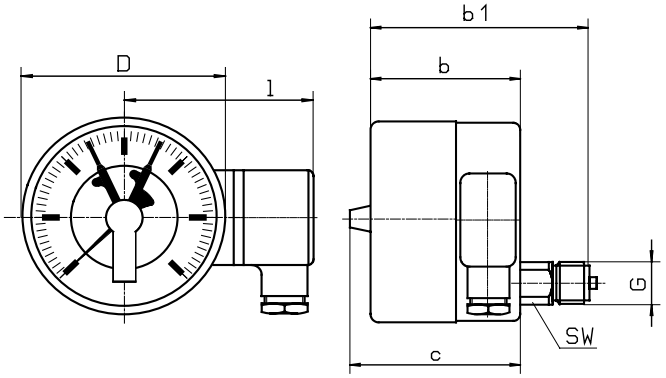

Front / rear mounting flange

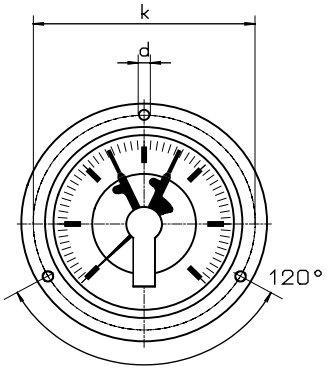

rear mounting flange

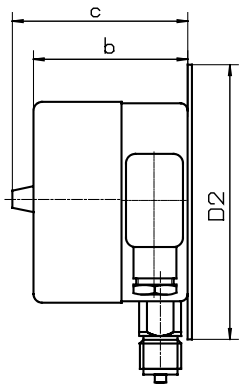

front mounting flange

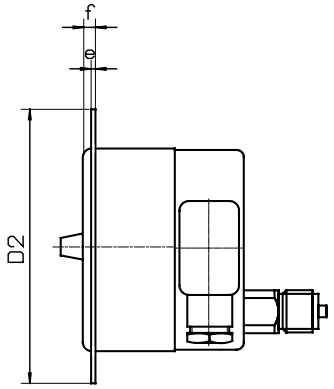

Dimensions in mm														
Model	NG	D	a	b	b1	h		D2	e	f	k	d	sw	G
KMR-30	100	101	15	78	-	86		132	2	6	116	5	22	G 1/2 B
KMR-35	100	101	-	78	113	-		132	2	6	116	5	22	G 1/2 B

Model	NG	c	l
KMR-30	100	88	88
KMR-35	100	88	88

Modelspecification

Model	Connection	Filling	Nominal size	Range	Options
KMR-3	0 or 5	F or -	100	f.e.10 bar	f.e. M 12

Bottom = 0
Back eccentric = 5

with filling = F
without filling =

Case ND 100 = 100

after rangespecification
for 10 bar = 010

Contact after Specification

Contact closes/ opens

SUCHY MESSTECHNIK
Garnsdorfer Hauptstraße 116 ,D-09244 Lichtenau ,Tel.:037208/66580 ,Fax:037208/66582
e-Mail:suchy@suchy-messtechnik.de

Modifications reserved

All stainless steel contact pressure gauges for special safety to DIN EN 837-1 with or without glycerine filling

Nominal size ND 100 and 160 mm
accuracy class 1,0

according to DIN EN 837-1(old DIN 160006)

Features

Solid front betwen measuring system and dial
Fullfills highest safety requirements to DIN 16006
Vibration free display and long service life
through glycerine filling
Ideal for hard conditions
High reliability on a longterm basis

Application

Chemical and petrochemical industry
Foodstoffs and beverages industry
Paper industry
Processing technology,
Machine and apparatus construction,

			with silicon oil filling	
Model and ND	**KMR-36 100**	**KMR-36 160**	**KMR-36 100 F**	**KMR-36 160 F**
Comnection	bottom			
Ranges in bar	0...0,6, 1, 1,6, 2,5, 4, 6, 10, 16, 25, 40, 60, 100, 160, 250, 400, 600, 1.000, 1.600 -0,6 / 0, -1 / 0, -1 / +0,6, -1 / +1,5, -1 / +3, -1 / +5, -1 / +9, -1 / +15, -1 / +24			
Applications	Constant load : up to end of scale value Alternating load : up to 0,9 x end of scale value Short time : overload capacity 1,3 x			
Case	CrNi steel with blow - out back , solid front			
Bezel	CrNi steel bayonet ring			
Window	Polycarbonat			
Dial	Aluminium white, scale and imprint black			
Pointer	Aluminium , black			
Movement	CrNi steel			
Maesuring element	CrNi steel Bourdon tube < 40 bar, helial tube > 60 bar			
Pressure Connection	SW 22, CrNi steel			
Connectionthread	G 1/2 B			
Protection	IP 54 to EN 60529 / IEC 529		IP 65 to EN 60529 / IEC 529	
Temperatures	Medium: -20°C bis 80°C, Ambient: -25°C bis 60°C			
Weight	0,9 kg	1,2 kg	2,2 kg	3,8 kg
Technische Informationen zu Magnetspring- und Induktivkontakten siehe Datenblätter M 950 und M 960				

SUCHY MESSTECHNIK
Garnsdorfer Hauptstraße 116 ,D-09244 Lichtenau ,Tel.:037208/66580 ,Fax:037208/66582
e-Mail:suchy@suchy-messtechnik.de

Dimensions

Connection bottom

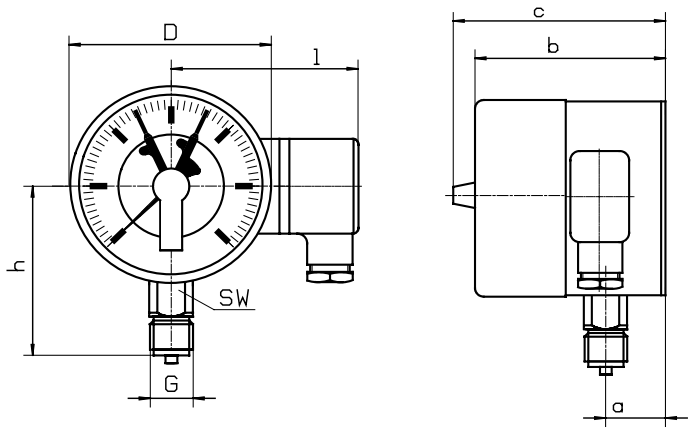

Front flange

Front flange

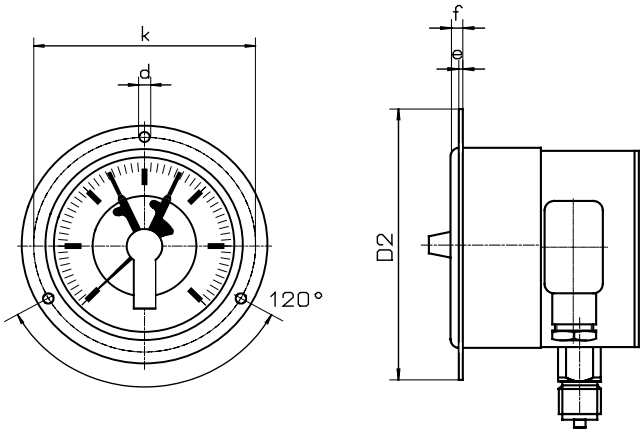

Dimensions in mm														
Model	NG	D	a	b		h		D2	e	f	k	d	sw	G
KMR-36	100	101	?	?		86		132	2	6	116	5	22	G 1/2 B
KMR-36	160	160	?	?		118		196	3	8	178	5,6	22	G 1/2 B

Model	NG	c	l
KMR-30	160	107	118
KMR-35	160	107	118

Modelspecification

Model	Connection	Filling	Nominal size	Range	Options
KMR-3	6	F or -	100 or 160	f.e. 10 bar	f.e.M 12

Safety case connection bottom

Contact after Specification

Contact closes/ opens

Case ND 100 = 100
Case ND 160 = 160

wit filling = F
without filling -

after Rangespecification
or direkt 10 bar

SUCHY MESSTECHNIK
Garnsdorfer Hauptstraße 116 ,D-09244 Lichtenau ,Tel.:037208/66580 ,Fax:037208/66582
e-Mail:suchy@suchy-messtechnik.de

Änderungen vorbehalten